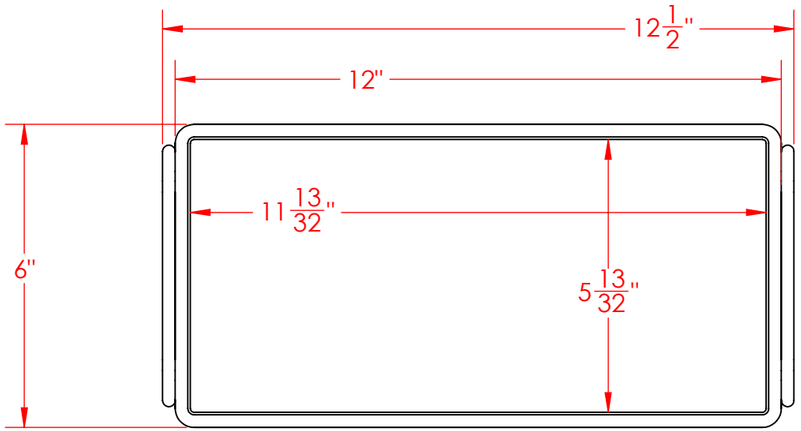

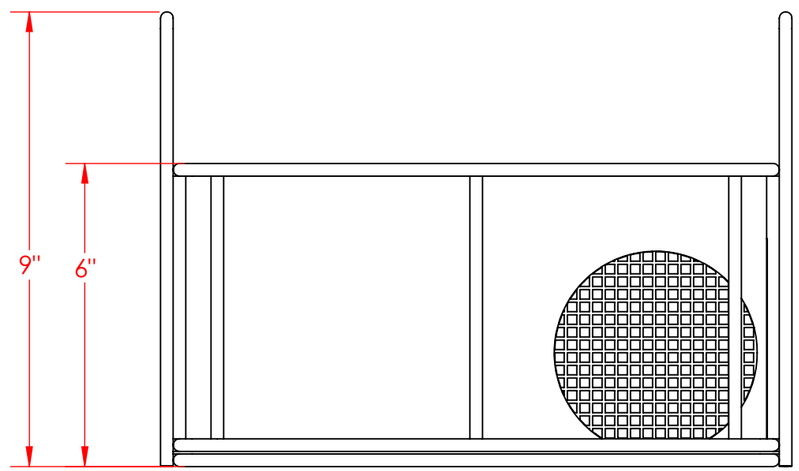

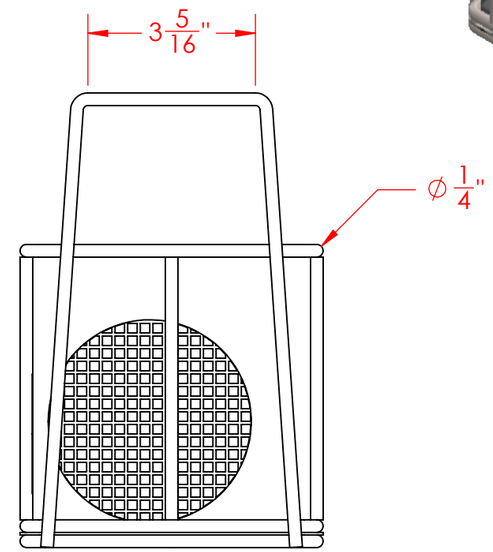

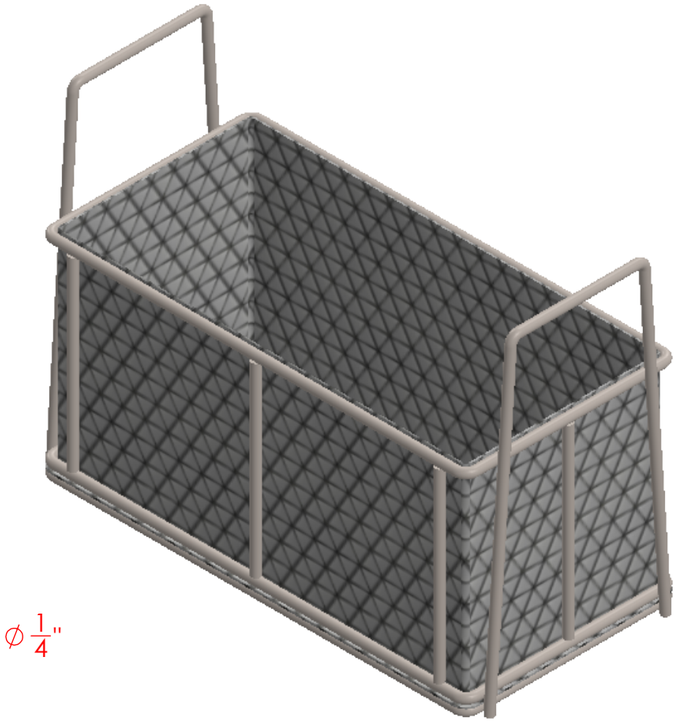

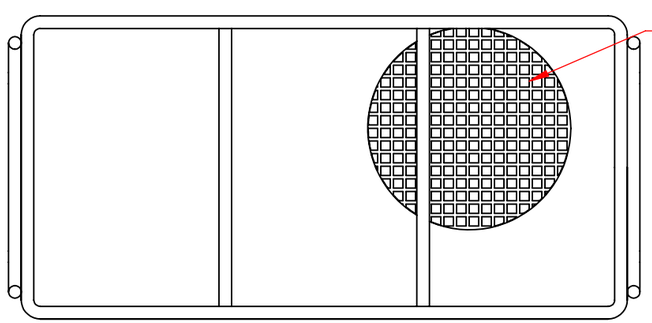

Lined Bottom and Sides with
4 Mesh x .063" Woven Wire
(.187" Openings, 56% Open Area)

UNLESS OTHERWISE SPECIFIED:

DIMENSIONS ARE IN INCHES
TOLERANCES:
FRACTIONAL ± 1/16"
ANGULAR: ± 5 DEG.
TWO PLACE DECIMAL ±0.03
THREE PLACE DECIMAL ±0.015

EST WGT
4.7 lbs.

MATERIAL
304 Stainless Steel

FINISH
Natural

DO NOT SCALE DRAWING

Rectangular Wire Mesh Basket: 12Lx6Wx6H, 304 SS, 1/4 Rod Frame, Stacking Handles, Mesh: 4 x .063

SIZE **B**

DWG. NO.
TMT-120060060-A04S

SCALE: 1:3

SHEET 1 OF 1

PROPRIETARY AND CONFIDENTIAL

THE INFORMATION CONTAINED IN THIS DRAWING IS THE SOLE PROPERTY OF THREE M TOOL. ANY REPRODUCTION IN PART OR AS A WHOLE WITHOUT THE WRITTEN PERMISSION OF THREE M TOOL IS PROHIBITED.